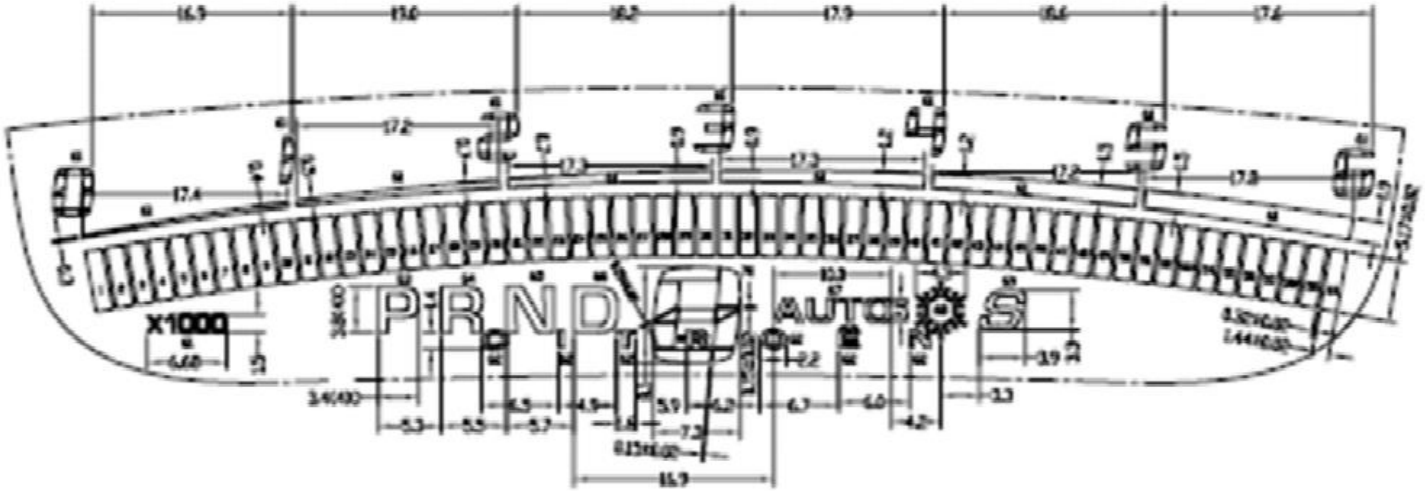

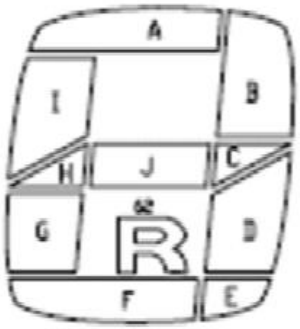

PIN	1	2	3	4	5	6	7	8	9	10	11	12	13	14	15
COM1	CONNECTED WITH PIN 30	COM1	/	/	/	1	8	9	16	/	17	24	25	29	70I
COM2		/	COM2	/	/	2	7	10	15	/	18	23	26	28	70H
COM3		/	/	COM3	/	3	6	11	14	/	19	22	27	66	70G
COM4		/	/	/	COM4	4	5	12	13	63	20	21	64	65	62
PIN	16	17	18	19	20	21	22	23	24	25	26	27	28	29	30
COM1	70A	70C	70B	36	/	37	/	44	/	51	/	61	/	/	CONNECTED WITH PIN 1
COM2	70J	70D	30	35	/	38	43	45	50	52	57	58	/	/	
COM3	70F	70E	31	34	/	39	42	46	49	53	56	59	/	/	
COM4	68	67	32	33	69	40	41	47	48	54	55	60	/	/	

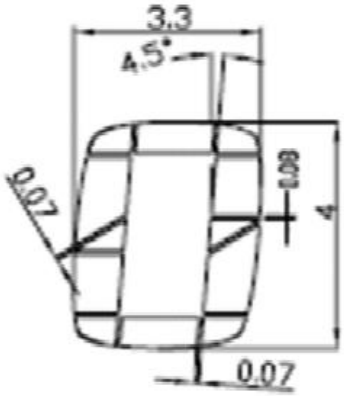

A2C00050374