ALT	REF	DESCRIPTION	DATE	BY
A	SCN#03053022	Initial release.(SRF#22452 & 05D3016/24/0001)	20050911	CY XIA

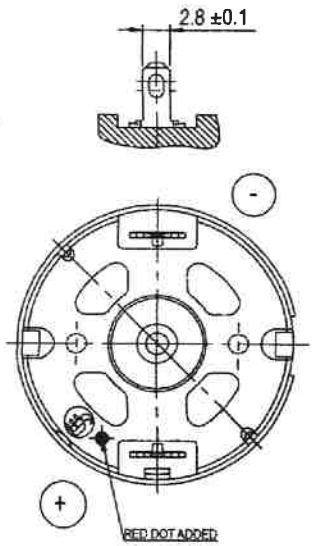

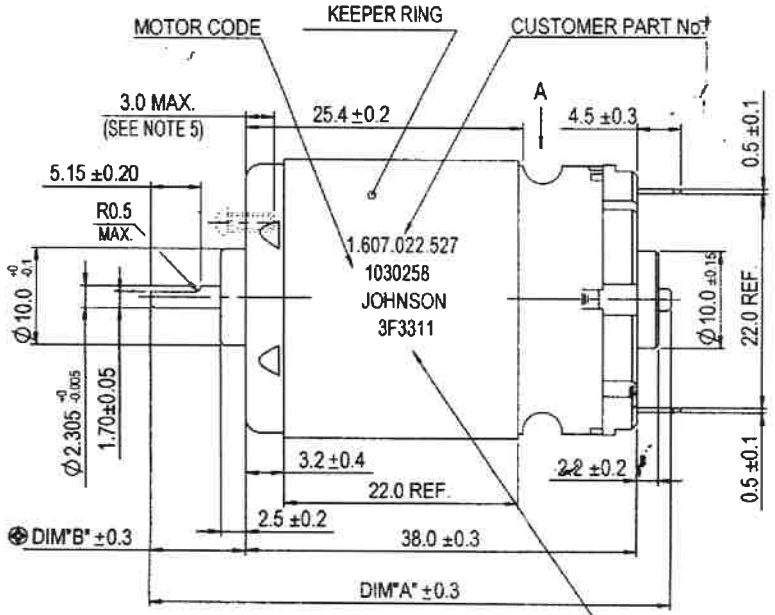

DIRECT PRINT CUSTOMER PART No. ,MOTOR CODE, JOHNSON & DATE CODE ONTO KEEPER RING.
DATE CODE FORMAT : AS ESDC-038

ROTATION

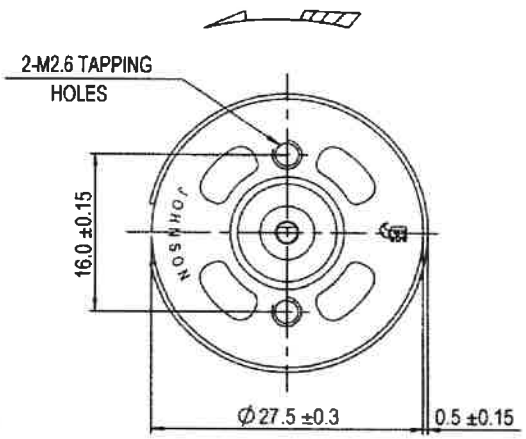

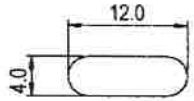

VIEW "A"

NOTES:-

1. LENGTH OF SHAFT, DIM. "A" 51.0 mm..
2. FRONT EXTENSION, DIM. "B" 9.7 mm., MEASURED WITH SHAFT PUSHED AGAINST PLASTIC END CAP.
3. DIRECTION OF ROTATION : ANTI-CLOCKWISE WHEN VIEWING MOTOR OUTPUT END WITH POSITIVE VOLTAGE APPLIED TO POSITIVE TERMINAL.
4. END PLAY : 0.50 mm. MAX..
5. TAPPED HOLES CAN ACCEPT MAX. MALE USABLE SCREW LENGTH OF 3.0 mm.

C_{pk}	Characteristics: Key Product	Customer Specific
> 1.67		
> 1.33		
> 1.00		
Not Required		

DWN. BY CY XIA	CHK. BY	APP. BY	
Date (yyyymmdd) 20050911	Date (yyyymmdd)	Date (yyyymmdd)	
MATERIAL			A3
FINISH			
General Tolerance : ISO 2768-1 Class m (Unless specified)	ALL DIMENTIONS ARE IN MILLIMETRES	SCALE 2:1	

JOHNSON ELECTRIC — JOHNSON ELECTRIC GROUP OF COMPANIES ("JOHNSON ELECTRIC")

This document is the Property of Johnson Electric and the information therein contained is confidential. Unauthorised reproduction or other use thereof, whether directly or indirectly, in whole or in part, is strictly prohibited. All products made or otherwise derived directly or indirectly from the document are proprietary to Johnson Electric.
© Copyright Johnson Electric S. A. 2005. All rights reserved.

TITLE: MOTOR OUTLINE (HC313MG)

DWG No. 1999-1030258

SHEET 1 OF 1

JOHNSON ELECTRIC INDUSTRIAL MANUFACTORY LTD.

Johnson Building,6-22, Dai Shun Street, Tai Po, Hong Kong.

Excellence in *Micromotors* Since 1959

SOF NO : 05/0004 (86589)
Project No.: 05D3016
Winding : 0.5 - 19
Motor test reference no : HC313MG/FF/25032/5G2

Date : 2005/08/25

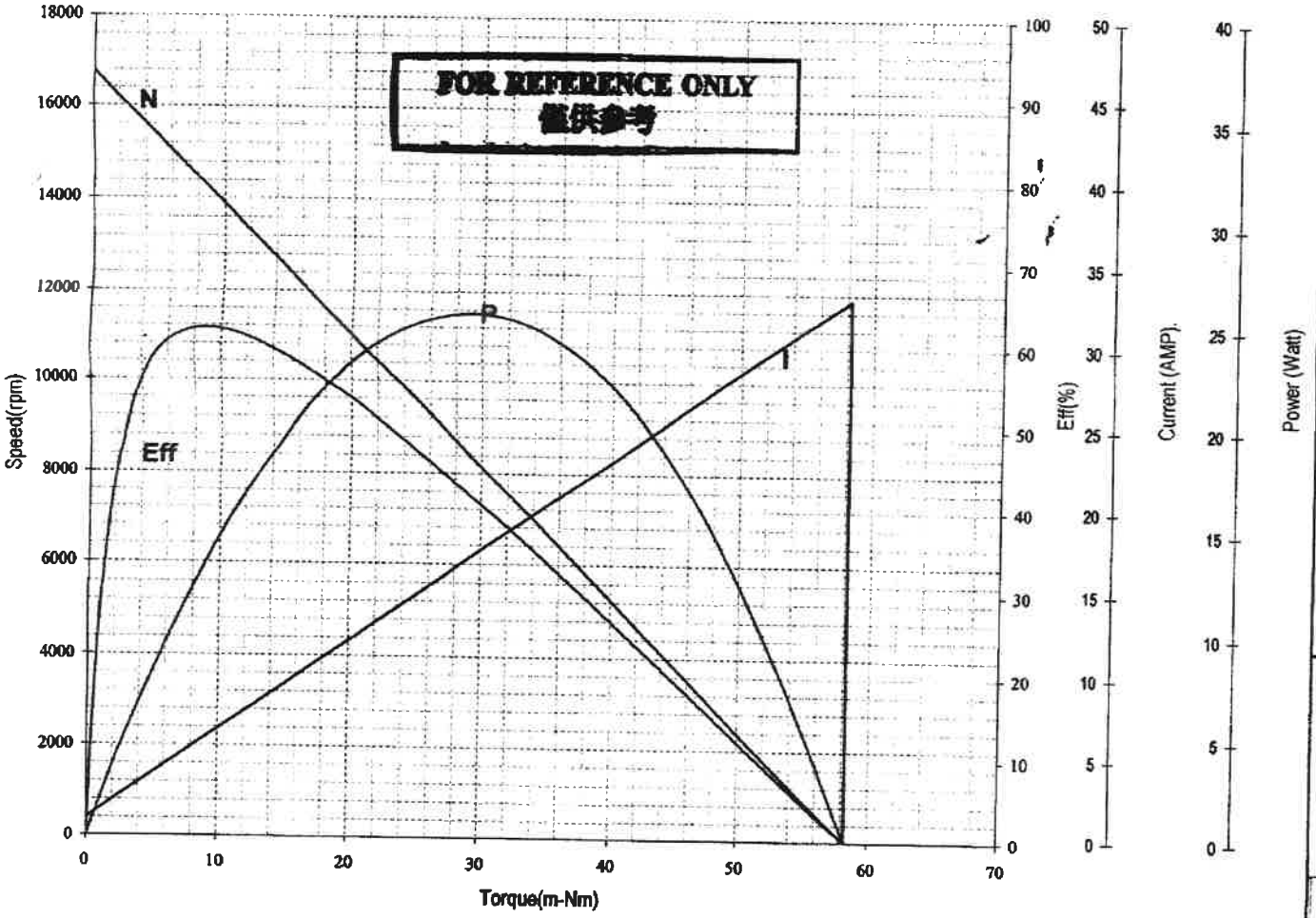

Performance (In an ambient temperature of 25 -30 C)
Motor tested rapidly to prevent significant temperature rise.

At a constant voltage of	3.60	Volts
With a circuit resistance	0.000	Ohms

At No Load

Speed :	16768 Rpm
Current:	1.073 Amp

At stall (Extrapolated)

Torque :	58.245 m-Nm
Current:	32.951 Amp

At maximum efficiency

Efficiency :	61.89 %
Torque :	8.905 m-Nm
Speed :	14204 Rpm
Current :	5.947 Amp
Output :	13.251 Watts

At maximum power

Torque :	29.123 m-Nm
Speed :	8384 Rpm
Current :	17.012 Amp
Output :	25.578 Watts

Characteristics

Torque Constant :	1.827 m-Nm/Amp
E.M.F Constant :	1.827 mV/rad/sec
Dy. Resistance :	0.109 Ohms
Motor Regulation:	287.881 Rpm/m-Nm

At Torque Level:

Torque: m-Nm

COMPUTER PRINT-OUT NOMINAL MOTOR CURVES
Performance and characteristics are measured based on limited motor samples only.

Issued by Motor Sampling

FORM : PIB-930701-1