muRata

Reference Specification

Type KY
(Safety standard certified ceramic capacitor)

Product specifications in this catalog are as of Mar.2015, and are subject to change or obsolescence without notice.
Please consult the approval sheet before ordering.Please read rating and Cautions first.

⚠ CAUTION

1. OPERATING VOLTAGE

When DC-rated capacitors are to be used in AC or ripple current circuits, be sure to maintain the Vp-p value of the applied voltage or the Vo-p which contains DC bias within the rated voltage range. When the voltage is started to apply to the circuit or it is stopped applying, the irregular voltage may be generated for a transit period because of resonance or switching. Be sure to use a capacitor within rated voltage containing these irregular voltage.

Voltage	DC Voltage	DC+AC Voltage	AC Voltage	Pulse Voltage(1)	Pulse Voltage(2)
Positional Measurement	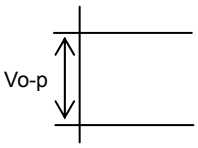	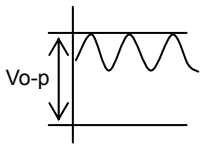	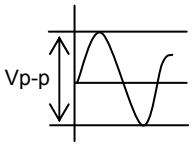	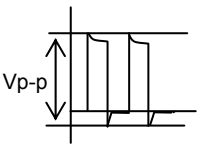	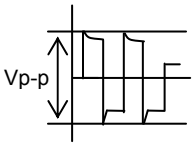

2. OPERATING TEMPERATURE AND SELF-GENERATED HEAT

Keep the surface temperature of a capacitor below the upper limit of its rated operating temperature range. Be sure to take into account the heat generated by the capacitor itself.
When the capacitor is used in a high-frequency current, pulse current or the like, it may have the self-generated heat due to dielectric-loss. Applied voltage should be the load such as self-generated heat is within 20 °C on the condition of atmosphere temperature 25 °C. When measuring, use a thermocouple of small thermal capacity-K of ϕ0.1mm and be in the condition where capacitor is not affected by radiant heat of other components and wind of surroundings. Excessive heat may lead to deterioration of the capacitor's characteristics and reliability.(Never attempt to perform measurement with the cooling fan running. Otherwise, accurate measurement cannot be ensured.)

3. TEST CONDITION FOR WITHSTANDING VOLTAGE

(1) TEST EQUIPMENT

Test equipment for AC withstanding voltage should be used with the performance of the wave similar to 50/60 Hz sine wave.
If the distorted sine wave or over load exceeding the specified voltage value is applied, the defective may be caused.

(2) VOLTAGE APPLIED METHOD

When the withstanding voltage is applied, capacitor's lead or terminal should be firmly connected to the out-put of the withstanding voltage test equipment, and then the voltage should be raised from near zero to the test voltage.
If the test voltage without the raise from near zero voltage would be applied directly to capacitor, test voltage should be applied with the *zero cross. At the end of the test time, the test voltage should be reduced to near zero, and then capacitor's lead or terminal should be taken off the out-put of the withstanding voltage test equipment.
If the test voltage without the raise from near zero voltage would be applied directly to capacitor, the surge voltage may arise, and therefore, the defective may be caused.
*ZERO CROSS is the point where voltage sine wave pass 0V.
- See the right figure -

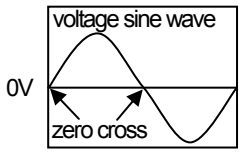

4. FAIL-SAFE

When capacitor would be broken, failure may result in a short circuit. Be sure to provide an appropriate fail-safe function like a fuse on your product if failure would follow an electric shock, fire or fume.

5. VIBRATION AND IMPACT

Do not expose a capacitor or its leads to excessive shock or vibration during use.

6. SOLDERING

When soldering this product to a PCB/PWB, do not exceed the solder heat resistance specification of the capacitor. Subjecting this product to excessive heating could melt the internal junction solder and may result in thermal shocks that can crack the ceramic element.

When soldering capacitor with a soldering iron, it should be performed in following conditions.

Temperature of iron-tip : 400 °C max.
Soldering iron wattage : 50W max.
Soldering time : 3.5s max.

7. BONDING, RESIN MOLDING AND COATING

In case of bonding, molding or coating this product, verify that these processes do not affect the quality of capacitor by testing the performance of the bonded, molded or coated product in the intended equipment.

In case of the amount of applications, dryness / hardening conditions of adhesives and molding resins containing organic solvents (ethyl acetate, methyl ethyl ketone, toluene, etc.) are unsuitable, the outer coating resin of a capacitor is damaged by the organic solvents and it may result, worst case, in a short circuit.

The variation in thickness of adhesive, molding resin or coating may cause a outer coating resin cracking and/or ceramic element cracking of a capacitor in a temperature cycling.

8. TREATMENT AFTER BONDING, RESIN MOLDING AND COATING

When the outer coating is hot (over 100 ℃) after soldering, it becomes soft and fragile.
So please be careful not to give it mechanical stress.

Failure to follow the above cautions may result, worst case, in a short circuit and cause fuming or partial dispersion when the product is used.

9. OPERATING AND STORAGE ENVIRONMENT

The insulating coating of capacitors does not form a perfect seal; therefore, do not use or store capacitors in a corrosive atmosphere, especially where chloride gas, sulfide gas, acid, alkali, salt or the like are present. And avoid exposure to moisture. Before cleaning, bonding, or molding this product, verify that these processes do not affect product quality by testing the performance of a cleaned, bonded or molded product in the intended equipment. Store the capacitors where the temperature and relative humidity do not exceed -10 to 40 °C and 15 to 85%.

Use capacitors within 6 months after delivered. Check the solderability after 6 months or more.

10. LIMITATION OF APPLICATIONS

Please contact us before using our products for the applications listed below which require especially high reliability for the prevention of defects which might directly cause damage to the third party's life, body or property.

1. Aircraft equipment
2. Aerospace equipment
3. Undersea equipment
4. Power plant control equipment
5. Medical equipment
6. Transportation equipment (vehicles, trains, ships, etc.)
7. Traffic signal equipment
8. Disaster prevention / crime prevention equipment
9. Data-processing equipment exerting influence on public
10. Application of similar complexity and/or reliability requirements to the applications listed in the above.

NOTICE

1. CLEANING (ULTRASONIC CLEANING)

To perform ultrasonic cleaning, observe the following conditions.
Rinse bath capacity : Output of 20 watts per liter or less.
Rinsing time : 5 min maximum.
Do not vibrate the PCB/PWB directly.
Excessive ultrasonic cleaning may lead to fatigue destruction of the lead wires.

2. CAPACITANCE CHANGE OF CAPACITORS

· Class 1 capacitors
Capacitance might change a little depending on a surrounding temperature or an applied voltage.
Please contact us if you use for the strict time constant circuit.

· Class 2 and 3 capacitors
Class 2 and 3 capacitors like temperature characteristic B, E and F have an aging characteristic, whereby the capacitor continually decreases its capacitance slightly if the capacitor leaves for a long time. Moreover, capacitance might change greatly depending on a surrounding temperature or an applied voltage. So, it is not likely to be able to use for the time constant circuit.
Please contact us if you need a detail information.

3. PERFORMANCE CHECK BY EQUIPMENT

Before using a capacitor, check that there is no problem in the equipment's performance and the specifications.
Generally speaking, CLASS 2 ceramic capacitors have voltage dependence characteristics and temperature dependence characteristics in capacitance. So, the capacitance value may change depending on the operating condition in a equipment. Therefore, be sure to confirm the apparatus performance of receiving influence in a capacitance value change of a capacitor, such as leakage current and noise suppression characteristic.
Moreover, check the surge-proof ability of a capacitor in the equipment, if needed, because the surge voltage may exceed specific value by the inductance of the circuit.

⚠ NOTE

1. Please make sure that your product has been evaluated in view of your specifications with our product being mounted to your product.
2. You are requested not to use our product deviating from this specification.

1. Application

This specification is applied to following safety standard certified ceramic capacitor Type KY.
Type KY is Safety Standard Certified disc ceramic capacitor of Class X1,Y2.
Do not use these products in any automotive power train or safety equipment including battery chargers for electric vehicles and plug-in hybrids.

Approval standard and certified number

	Standard number	*Certified number	AC Rated volt. V(r.m.s.)
UL	UL60384-14	E37921	250
CSA	CSA E60384-14	1283280	250
VDE	IEC60384-14, EN60384-14	40006273	250
BSI	EN60065 (8.8,14.2), IEC60384-14, EN60384-14	KM 37901	250
SEMKO	IEC60384-14, EN60384-14	1207848	250
DEMKO		D01002	250
FIMKO		24197	250
NEMKO		P12215094	250
ESTI		12.0102	250
NSW	IEC60384-14, AS3250	6824	250
CQC	GB/T14472	CQC06001017446	250
		CQC06001017447	

*Above Certified number may be changed on account of the revision of standards and the renewal of certification.

2. Rating

2-1. Operating temperature range

-40 ~ +125°C
(-25 ~ +125°C is certified in safety certificates except UL and VDE.)

2-2. Part number configuration

ex.)	DE2	E3	KY	472	M	A2	B	M01F
	Product code	Temperature characteristic	Type name	Capacitance	Capacitance tolerance	Lead code	Packing style code	Individual specification

- Product code
  DE2 denotes class X1,Y2.

- Temperature characteristic

Code	Temperature characteristic
1X	SL
B3	B
E3	E
F3	F

Please confirm detailed specification on [Specification and test methods].

- Type name
  This denotes safety certified type name Type KY.

- Capacitance
  The first two digits denote significant figures ; the last digit denotes the multiplier of 10 in pF.
  ex.) In case of 472.
  47×10^2 = 4700pF

- Capacitance tolerance
  Please refer to [Part number list].

- Lead code

Code	Lead style	
A∗	Vertical crimp long type	
B∗	Vertical crimp short type	Lead Length : 5mm
J∗		Lead Length : 3.5mm
N∗	Vertical crimp taping type	

∗ Please refer to [Part number list].

- Packing style code

Code	Packing type
B	Bulk type
A	Ammo pack taping type

- Individual specification
  In case part number cannot be identified without 'individual specification' , it is added at the end of part number.

Code	Specification	
M01F	Guarantee of dielectric strength between lead wires: AC2000V(r.m.s.)	‣ Simplicity marking ‣ Halogen Free (Br ≤ 900ppm, Cl ≤ 900ppm, Br + Cl ≤ 1500ppm) ‣ CP wire
M02F	Guarantee of dielectric strength between lead wires: AC2600V(r.m.s.)	

Note) Murata part numbers might be changed depending on lead code or any other changes. Therefore, please specify only the type name(KY) and capacitance of products in the parts list when it is required for applying safety standard of electric equipment.

3. Marking

Nominal capacitance	: Actual value(under 100pF) 3 digit system(100pF and over)
Capacitance tolerance	: Code
Type name	: KY
Rated voltage mark	: **250~**
Class code	: **X1Y2**
Halogen Free mark	: HF
Manufacturing year	: Letter code(The last digit of A.D. year.)
Manufacturing month	: Code Feb./Mar. → 2 Aug./Sep. → 8 Apr./May → 4 Oct./Nov. → O Jun./Jul. → 6 Dec./Jan. → D
Company name code	: CM8 (Made in Taiwan), CM15 (Made in Thailand)

(Example)

4. Part number list

・Vertical crimp long type
(Lead code:A*)

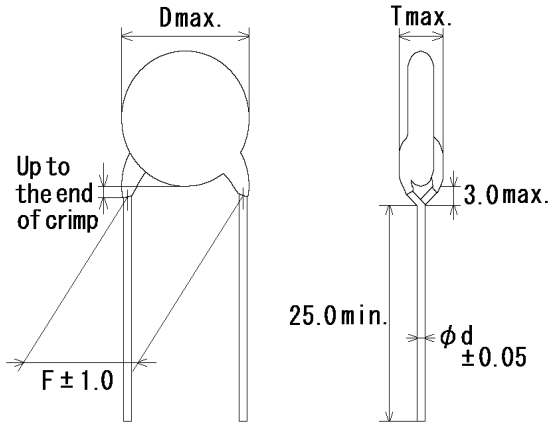

Note) The mark '*' of lead code differ from lead spacing(F) and lead diameter(d).
Please see the following list about details.

Unit : mm

T.C.	Cap. (pF)	Cap. tol.	Customer Part Number	Murata Part Number	Dimension (mm)				Lead code	Pack qty. (pcs)
					D	T	F	d		
SL	10	±5%		DE21XKY100JA2BM01F	8.0	5.0	5.0	0.6	A2	250
SL	15	±5%		DE21XKY150JA2BM01F	8.0	5.0	5.0	0.6	A2	250
SL	22	±5%		DE21XKY220JA2BM01F	8.0	5.0	5.0	0.6	A2	250
SL	33	±5%		DE21XKY330JA2BM01F	8.0	5.0	5.0	0.6	A2	250
SL	47	±5%		DE21XKY470JA2BM01F	8.0	5.0	5.0	0.6	A2	250
SL	68	±5%		DE21XKY680JA2BM01F	8.0	5.0	5.0	0.6	A2	250
B	100	±10%		DE2B3KY101KA2BM01F	7.0	5.0	5.0	0.6	A2	500
B	150	±10%		DE2B3KY151KA2BM01F	7.0	5.0	5.0	0.6	A2	500
B	220	±10%		DE2B3KY221KA2BM01F	7.0	5.0	5.0	0.6	A2	500
B	330	±10%		DE2B3KY331KA2BM01F	7.0	5.0	5.0	0.6	A2	500
B	470	±10%		DE2B3KY471KA2BM01F	7.0	5.0	5.0	0.6	A2	500
B	680	±10%		DE2B3KY681KA2BM01F	8.0	5.0	5.0	0.6	A2	250
E	1000	±20%		DE2E3KY102MA2BM01F	7.0	5.0	5.0	0.6	A2	500
E	1500	±20%		DE2E3KY152MA2BM01F	7.0	5.0	5.0	0.6	A2	500
E	2200	±20%		DE2E3KY222MA2BM01F	8.0	5.0	5.0	0.6	A2	250
E	3300	±20%		DE2E3KY332MA2BM01F	9.0	5.0	5.0	0.6	A2	250
E	4700	±20%		DE2E3KY472MA2BM01F	10.0	5.0	5.0	0.6	A2	250

・Vertical crimp long type
(Lead code:A*)

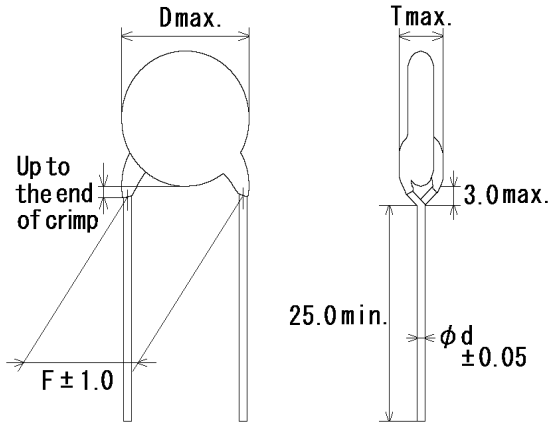

Note) The mark '*' of lead code differ from lead spacing(F) and lead diameter(d).
Please see the following list about details.

Unit : mm

T.C.	Cap. (pF)	Cap. tol.	Customer Part Number	Murata Part Number	Dimension (mm)				Lead code	Pack qty. (pcs)
					D	T	F	d		
SL	10	±5%		DE21XKY100JA3BM02F	8.0	5.0	7.5	0.6	A3	250
SL	15	±5%		DE21XKY150JA3BM02F	8.0	5.0	7.5	0.6	A3	250
SL	22	±5%		DE21XKY220JA3BM02F	8.0	5.0	7.5	0.6	A3	250
SL	33	±5%		DE21XKY330JA3BM02F	8.0	5.0	7.5	0.6	A3	250
SL	47	±5%		DE21XKY470JA3BM02F	8.0	5.0	7.5	0.6	A3	250
SL	68	±5%		DE21XKY680JA3BM02F	8.0	5.0	7.5	0.6	A3	250
B	100	±10%		DE2B3KY101KA3BM02F	7.0	5.0	7.5	0.6	A3	250
B	150	±10%		DE2B3KY151KA3BM02F	7.0	5.0	7.5	0.6	A3	250
B	220	±10%		DE2B3KY221KA3BM02F	7.0	5.0	7.5	0.6	A3	250
B	330	±10%		DE2B3KY331KA3BM02F	7.0	5.0	7.5	0.6	A3	250
B	470	±10%		DE2B3KY471KA3BM02F	7.0	5.0	7.5	0.6	A3	250
B	680	±10%		DE2B3KY681KA3BM02F	8.0	5.0	7.5	0.6	A3	250
E	1000	±20%		DE2E3KY102MA3BM02F	7.0	5.0	7.5	0.6	A3	250
E	1500	±20%		DE2E3KY152MA3BM02F	7.0	5.0	7.5	0.6	A3	250
E	2200	±20%		DE2E3KY222MA3BM02F	8.0	5.0	7.5	0.6	A3	250
E	3300	±20%		DE2E3KY332MA3BM02F	9.0	5.0	7.5	0.6	A3	250
E	4700	±20%		DE2E3KY472MA3BM02F	10.0	5.0	7.5	0.6	A3	250
F	10000	±20%		DE2F3KY103MA3BM02F	14.0	5.0	7.5	0.6	A3	200

·Vertical crimp short type
(Lead code:B*)

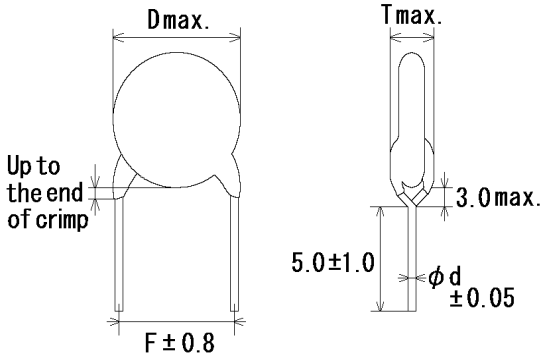

Note) The mark '*' of lead code differ from lead spacing(F) and lead diameter(d).
Please see the following list about details.

Unit : mm

T.C.	Cap. (pF)	Cap. tol.	Customer Part Number	Murata Part Number	Dimension (mm)				Lead code	Pack qty. (pcs)
					D	T	F	d		
SL	10	±5%		DE21XKY100JB2BM01F	8.0	5.0	5.0	0.6	B2	500
SL	15	±5%		DE21XKY150JB2BM01F	8.0	5.0	5.0	0.6	B2	500
SL	22	±5%		DE21XKY220JB2BM01F	8.0	5.0	5.0	0.6	B2	500
SL	33	±5%		DE21XKY330JB2BM01F	8.0	5.0	5.0	0.6	B2	500
SL	47	±5%		DE21XKY470JB2BM01F	8.0	5.0	5.0	0.6	B2	500
SL	68	±5%		DE21XKY680JB2BM01F	8.0	5.0	5.0	0.6	B2	500
B	100	±10%		DE2B3KY101KB2BM01F	7.0	5.0	5.0	0.6	B2	500
B	150	±10%		DE2B3KY151KB2BM01F	7.0	5.0	5.0	0.6	B2	500
B	220	±10%		DE2B3KY221KB2BM01F	7.0	5.0	5.0	0.6	B2	500
B	330	±10%		DE2B3KY331KB2BM01F	7.0	5.0	5.0	0.6	B2	500
B	470	±10%		DE2B3KY471KB2BM01F	7.0	5.0	5.0	0.6	B2	500
B	680	±10%		DE2B3KY681KB2BM01F	8.0	5.0	5.0	0.6	B2	500
E	1000	±20%		DE2E3KY102MB2BM01F	7.0	5.0	5.0	0.6	B2	500
E	1500	±20%		DE2E3KY152MB2BM01F	7.0	5.0	5.0	0.6	B2	500
E	2200	±20%		DE2E3KY222MB2BM01F	8.0	5.0	5.0	0.6	B2	500
E	3300	±20%		DE2E3KY332MB2BM01F	9.0	5.0	5.0	0.6	B2	500
E	4700	±20%		DE2E3KY472MB2BM01F	10.0	5.0	5.0	0.6	B2	500

・Vertical crimp short type
(Lead code:B*)

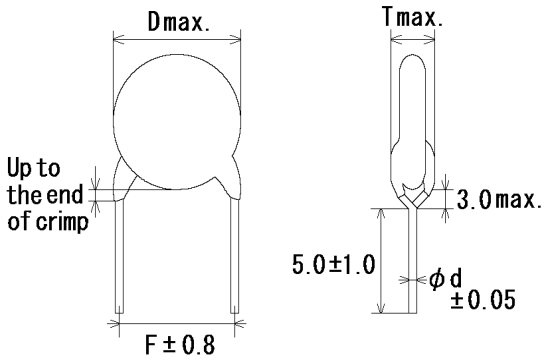

Note) The mark '*' of lead code differ from lead spacing(F) and lead diameter(d).
Please see the following list about details.

Unit : mm

T.C.	Cap. (pF)	Cap. tol.	Customer Part Number	Murata Part Number	Dimension (mm)				Lead code	Pack qty. (pcs)
					D	T	F	d		
SL	10	±5%		DE21XKY100JB3BM02F	8.0	5.0	7.5	0.6	B3	500
SL	15	±5%		DE21XKY150JB3BM02F	8.0	5.0	7.5	0.6	B3	500
SL	22	±5%		DE21XKY220JB3BM02F	8.0	5.0	7.5	0.6	B3	500
SL	33	±5%		DE21XKY330JB3BM02F	8.0	5.0	7.5	0.6	B3	500
SL	47	±5%		DE21XKY470JB3BM02F	8.0	5.0	7.5	0.6	B3	500
SL	68	±5%		DE21XKY680JB3BM02F	8.0	5.0	7.5	0.6	B3	500
B	100	±10%		DE2B3KY101KB3BM02F	7.0	5.0	7.5	0.6	B3	500
B	150	±10%		DE2B3KY151KB3BM02F	7.0	5.0	7.5	0.6	B3	500
B	220	±10%		DE2B3KY221KB3BM02F	7.0	5.0	7.5	0.6	B3	500
B	330	±10%		DE2B3KY331KB3BM02F	7.0	5.0	7.5	0.6	B3	500
B	470	±10%		DE2B3KY471KB3BM02F	7.0	5.0	7.5	0.6	B3	500
B	680	±10%		DE2B3KY681KB3BM02F	8.0	5.0	7.5	0.6	B3	500
E	1000	±20%		DE2E3KY102MB3BM02F	7.0	5.0	7.5	0.6	B3	500
E	1500	±20%		DE2E3KY152MB3BM02F	7.0	5.0	7.5	0.6	B3	500
E	2200	±20%		DE2E3KY222MB3BM02F	8.0	5.0	7.5	0.6	B3	500
E	3300	±20%		DE2E3KY332MB3BM02F	9.0	5.0	7.5	0.6	B3	500
E	4700	±20%		DE2E3KY472MB3BM02F	10.0	5.0	7.5	0.6	B3	500
F	10000	±20%		DE2F3KY103MB3BM02F	14.0	5.0	7.5	0.6	B3	250

・Vertical crimp short type
(Lead code:J*)

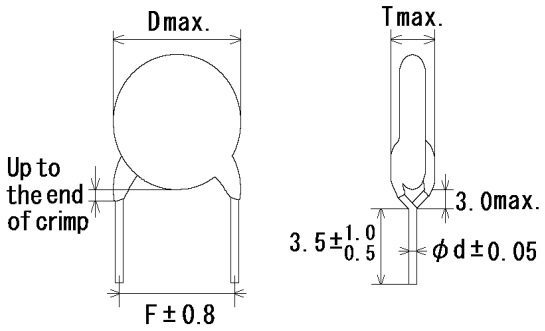

Note) The mark '*' of lead code differ from lead spacing(F) and lead diameter(d).
Please see the following list about details.

Unit : mm

T.C.	Cap. (pF)	Cap. tol.	Customer Part Number	Murata Part Number	Dimension (mm)				Lead code	Pack qty. (pcs)
					D	T	F	d		
SL	10	±5%		DE21XKY100JJ2BM01F	8.0	5.0	5.0	0.6	J2	500
SL	15	±5%		DE21XKY150JJ2BM01F	8.0	5.0	5.0	0.6	J2	500
SL	22	±5%		DE21XKY220JJ2BM01F	8.0	5.0	5.0	0.6	J2	500
SL	33	±5%		DE21XKY330JJ2BM01F	8.0	5.0	5.0	0.6	J2	500
SL	47	±5%		DE21XKY470JJ2BM01F	8.0	5.0	5.0	0.6	J2	500
SL	68	±5%		DE21XKY680JJ2BM01F	8.0	5.0	5.0	0.6	J2	500
B	100	±10%		DE2B3KY101KJ2BM01F	7.0	5.0	5.0	0.6	J2	500
B	150	±10%		DE2B3KY151KJ2BM01F	7.0	5.0	5.0	0.6	J2	500
B	220	±10%		DE2B3KY221KJ2BM01F	7.0	5.0	5.0	0.6	J2	500
B	330	±10%		DE2B3KY331KJ2BM01F	7.0	5.0	5.0	0.6	J2	500
B	470	±10%		DE2B3KY471KJ2BM01F	7.0	5.0	5.0	0.6	J2	500
B	680	±10%		DE2B3KY681KJ2BM01F	8.0	5.0	5.0	0.6	J2	500
E	1000	±20%		DE2E3KY102MJ2BM01F	7.0	5.0	5.0	0.6	J2	500
E	1500	±20%		DE2E3KY152MJ2BM01F	7.0	5.0	5.0	0.6	J2	500
E	2200	±20%		DE2E3KY222MJ2BM01F	8.0	5.0	5.0	0.6	J2	500
E	3300	±20%		DE2E3KY332MJ2BM01F	9.0	5.0	5.0	0.6	J2	500
E	4700	±20%		DE2E3KY472MJ2BM01F	10.0	5.0	5.0	0.6	J2	500

·Vertical crimp short type
(Lead code:J*)

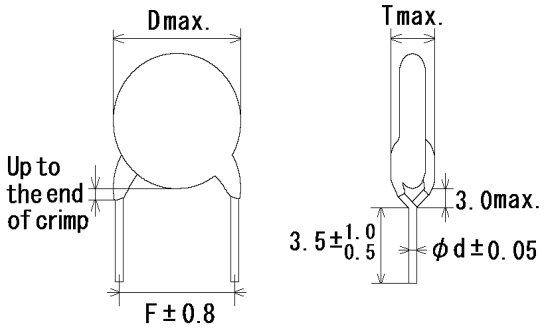

Note) The mark '*' of lead code differ from lead spacing(F) and lead diameter(d).
Please see the following list about details.

Unit : mm

T.C.	Cap. (pF)	Cap. tol.	Customer Part Number	Murata Part Number	Dimension (mm)				Lead code	Pack qty. (pcs)
					D	T	F	d		
SL	10	±5%		DE21XKY100JJ3BM02F	8.0	5.0	7.5	0.6	J3	500
SL	15	±5%		DE21XKY150JJ3BM02F	8.0	5.0	7.5	0.6	J3	500
SL	22	±5%		DE21XKY220JJ3BM02F	8.0	5.0	7.5	0.6	J3	500
SL	33	±5%		DE21XKY330JJ3BM02F	8.0	5.0	7.5	0.6	J3	500
SL	47	±5%		DE21XKY470JJ3BM02F	8.0	5.0	7.5	0.6	J3	500
SL	68	±5%		DE21XKY680JJ3BM02F	8.0	5.0	7.5	0.6	J3	500
B	100	±10%		DE2B3KY101KJ3BM02F	7.0	5.0	7.5	0.6	J3	500
B	150	±10%		DE2B3KY151KJ3BM02F	7.0	5.0	7.5	0.6	J3	500
B	220	±10%		DE2B3KY221KJ3BM02F	7.0	5.0	7.5	0.6	J3	500
B	330	±10%		DE2B3KY331KJ3BM02F	7.0	5.0	7.5	0.6	J3	500
B	470	±10%		DE2B3KY471KJ3BM02F	7.0	5.0	7.5	0.6	J3	500
B	680	±10%		DE2B3KY681KJ3BM02F	8.0	5.0	7.5	0.6	J3	500
E	1000	±20%		DE2E3KY102MJ3BM02F	7.0	5.0	7.5	0.6	J3	500
E	1500	±20%		DE2E3KY152MJ3BM02F	7.0	5.0	7.5	0.6	J3	500
E	2200	±20%		DE2E3KY222MJ3BM02F	8.0	5.0	7.5	0.6	J3	500
E	3300	±20%		DE2E3KY332MJ3BM02F	9.0	5.0	7.5	0.6	J3	500
E	4700	±20%		DE2E3KY472MJ3BM02F	10.0	5.0	7.5	0.6	J3	500
F	10000	±20%		DE2F3KY103MJ3BM02F	14.0	5.0	7.5	0.6	J3	250

・Vartical crimp taping type
(Lead code:N*)

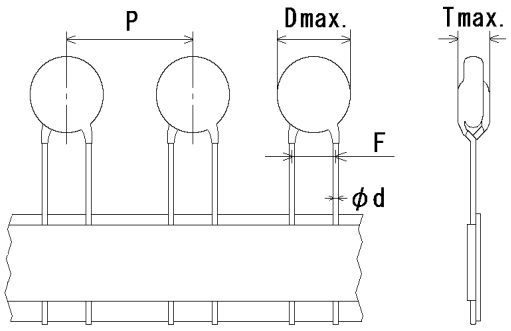

Note) The mark '*' of lead code differ from lead spacing(F), lead diameter(d) and pitch of component(P). Please see the following list or taping specification about details.

Unit : mm

T.C.	Cap. (pF)	Cap. tol.	Customer Part Number	Murata Part Number	Dimension (mm)					Lead code	Pack qty. (pcs)
					D	T	F	d	P		
SL	10	±5%		DE21XKY100JN2AM01F	8.0	5.0	5.0	0.6	12.7	N2	1000
SL	15	±5%		DE21XKY150JN2AM01F	8.0	5.0	5.0	0.6	12.7	N2	1000
SL	22	±5%		DE21XKY220JN2AM01F	8.0	5.0	5.0	0.6	12.7	N2	1000
SL	33	±5%		DE21XKY330JN2AM01F	8.0	5.0	5.0	0.6	12.7	N2	1000
SL	47	±5%		DE21XKY470JN2AM01F	8.0	5.0	5.0	0.6	12.7	N2	1000
SL	68	±5%		DE21XKY680JN2AM01F	8.0	5.0	5.0	0.6	12.7	N2	1000
B	100	±10%		DE2B3KY101KN2AM01F	7.0	5.0	5.0	0.6	12.7	N2	1000
B	150	±10%		DE2B3KY151KN2AM01F	7.0	5.0	5.0	0.6	12.7	N2	1000
B	220	±10%		DE2B3KY221KN2AM01F	7.0	5.0	5.0	0.6	12.7	N2	1000
B	330	±10%		DE2B3KY331KN2AM01F	7.0	5.0	5.0	0.6	12.7	N2	1000
B	470	±10%		DE2B3KY471KN2AM01F	7.0	5.0	5.0	0.6	12.7	N2	1000
B	680	±10%		DE2B3KY681KN2AM01F	8.0	5.0	5.0	0.6	12.7	N2	1000
E	1000	±20%		DE2E3KY102MN2AM01F	7.0	5.0	5.0	0.6	12.7	N2	1000
E	1500	±20%		DE2E3KY152MN2AM01F	7.0	5.0	5.0	0.6	12.7	N2	1000
E	2200	±20%		DE2E3KY222MN2AM01F	8.0	5.0	5.0	0.6	12.7	N2	1000
E	3300	±20%		DE2E3KY332MN2AM01F	9.0	5.0	5.0	0.6	12.7	N2	1000
E	4700	±20%		DE2E3KY472MN2AM01F	10.0	5.0	5.0	0.6	12.7	N2	1000

·Vartical crimp taping type
(Lead code:N*)

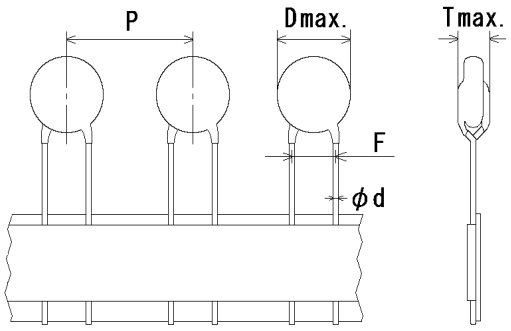

Note) The mark '*' of lead code differ from lead spacing(F), lead diameter(d) and pitch of component(P). Please see the following list or taping specification about details.

Unit : mm

T.C.	Cap. (pF)	Cap. tol.	Customer Part Number	Murata Part Number	Dimension (mm)					Lead code	Pack qty. (pcs)
					D	T	F	d	P		
SL	10	±5%		DE21XKY100JN3AM02F	8.0	5.0	7.5	0.6	15.0	N3	900
SL	15	±5%		DE21XKY150JN3AM02F	8.0	5.0	7.5	0.6	15.0	N3	900
SL	22	±5%		DE21XKY220JN3AM02F	8.0	5.0	7.5	0.6	15.0	N3	900
SL	33	±5%		DE21XKY330JN3AM02F	8.0	5.0	7.5	0.6	15.0	N3	900
SL	47	±5%		DE21XKY470JN3AM02F	8.0	5.0	7.5	0.6	15.0	N3	900
SL	68	±5%		DE21XKY680JN3AM02F	8.0	5.0	7.5	0.6	15.0	N3	900
B	100	±10%		DE2B3KY101KN3AM02F	7.0	5.0	7.5	0.6	15.0	N3	900
B	150	±10%		DE2B3KY151KN3AM02F	7.0	5.0	7.5	0.6	15.0	N3	900
B	220	±10%		DE2B3KY221KN3AM02F	7.0	5.0	7.5	0.6	15.0	N3	900
B	330	±10%		DE2B3KY331KN3AM02F	7.0	5.0	7.5	0.6	15.0	N3	900
B	470	±10%		DE2B3KY471KN3AM02F	7.0	5.0	7.5	0.6	15.0	N3	900
B	680	±10%		DE2B3KY681KN3AM02F	8.0	5.0	7.5	0.6	15.0	N3	900
E	1000	±20%		DE2E3KY102MN3AM02F	7.0	5.0	7.5	0.6	15.0	N3	900
E	1500	±20%		DE2E3KY152MN3AM02F	7.0	5.0	7.5	0.6	15.0	N3	900
E	2200	±20%		DE2E3KY222MN3AM02F	8.0	5.0	7.5	0.6	15.0	N3	900
E	3300	±20%		DE2E3KY332MN3AM02F	9.0	5.0	7.5	0.6	15.0	N3	900
E	4700	±20%		DE2E3KY472MN3AM02F	10.0	5.0	7.5	0.6	15.0	N3	900
F	10000	±20%		DE2F3KY103MN3AM02F	14.0	5.0	7.5	0.6	15.0	N3	900

5. Specification and test methods

No.	Item		Specification	Test method
1	Appearance and dimensions		No marked defect on appearance form and dimensions. Please refer to [Part number list].	The capacitor should be inspected by naked eyes for visible evidence of defect. Dimensions should be measured with slide calipers.
2	Marking		To be easily legible.	The capacitor should be inspected by naked eyes.
3	Dielectric strength	Between lead wires	No failure.	The capacitor should not be damaged when AC2000V(r.m.s.) [in case of individual specification :M01] or AC2600V(r.m.s.) [in case of individual specification:M02] <50/60Hz> is applied between the lead wires for 60 s. (Charge/Discharge current ≤ 50mA.)
		Body insulation	No failure.	First, the terminals of the capacitor should be connected together. Then, a metal foil should be closely wrapped around the body of the capacitor to the distance of about 3 to 4mm from each terminal. Then, the capacitor should be inserted into a container filled with metal balls of about 1mm diameter. Finally, AC2600V (r.m.s.)<50/60Hz> is applied for 60 s between the capacitor lead wires and metal balls. (Charge/Discharge current ≤ 50mA.)
4	Insulation Resistance (I.R.)		10000MΩ min.	The insulation resistance should be measured with DC500±50V within 60±5 s of charging. The voltage should be applied to the capacitor through a resistor of 1MΩ.
5	Capacitance		Within specified tolerance.	The capacitance should be measured at 20°C with 1±0.1kHz(Char. SL : 1±0.1MHz) and AC5V(r.m.s.) max..
6	Q		Char. SL : 400+20C*2min.(30pF under) 1000min. (30pF min.)	The dissipation factor and Q should be measured at 20°C with 1±0.1kHz(Char. SL : 1±0.1MHz) and AC5V(r.m.s.) max..
	Dissipation Factor (D.F.)		Char. B, E : 2.5% max. Char. F : 5.0% max.	
7	Temperature characteristic		Char. SL : +350 to –1000 ppm/°C (Temp. range : +20 to +85°C) Char. B : Within ±10 % Char. E : Within +20/-55% Char. F : Within +30/-80% (Temp. range : -25 to +85°C)	The capacitance measurement should be made at each step specified in Table.

Step	1	2	3	4	5
Temp.(°C)	20±2	-25±2	20±2	85±2	20±2

*2 ‘‘C” expresses nominal capacitance value(pF)

No.	Item		Specification	Test method
8	Active flammability		The cheese-cloth should not be on fire.	The capacitors should be individually wrapped in at least one but more than two complete layers of cheese-cloth. The capacitor should be subjected to 20 discharges. The interval between successive discharges should be 5 s. The UAc should be maintained for 2min after the last discharge. 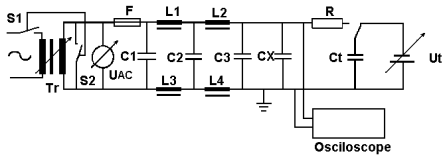 C1,2 : 1μF±10%, C3 : 0.033μF±5% 10kV L1 to L4 : 1.5mH±20% 16A Rod core choke R : 100Ω±2%, Ct : 3μF±5% 10kV UAc : UR ±5% UR : Rated working voltage Cx : Capacitor under test F : Fuse, Rated 10A Ut : Voltage applied to Ct 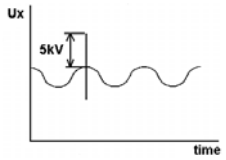
9	Robustness of terminations	Tensile	Lead wire should not cut off. Capacitor should not be broken.	Fix the body of capacitor, apply a tensile weight gradually to each lead wire in the radial direction of capacitor up to 10N and keep it for 10±1 s.
		Bending		With the termination in its normal position, the capacitor is held by its body in such a manner that the axis of the termination is vertical; a mass applying a force of 5N is then suspended from the end of the termination. The body of the capacitor is then inclined, within a period of 2 to 3 s, through an angle of about 90° in the vertical plane and then returned to its initial position over the same period of time; this operation constitutes one bend. One bend immediately followed by a second bend in the opposite direction.
10	Vibration resistance	Appearance	No marked defect.	The capacitor should be firmly soldered to the supporting lead wire and vibration which is 10 to 55Hz in the vibration frequency range,1.5mm in total amplitude, and about 1min in the rate of vibration change from 10Hz to 55Hz and back to 10Hz is applied for a total of 6 h; 2 h each in 3 mutually perpendicular directions.
		Capacitance	Within the specified tolerance.	
		Q	Char. SL : 400+20C*[2]min.(30pF under) 1000min. (30pF min.)	
		D.F.	Char. B, E : 2.5% max. Char. F : 5.0% max.	
11	Solderability of leads		Lead wire should be soldered with uniformly coated on the axial direction over 3/4 of the circumferential direction.	The lead wire of a capacitor should be dipped into a ethanol solution of 25wt% rosin and then into molten solder for 2±0.5 s. In both cases the depth of dipping is up to about 1.5 to 2.0mm from the root of lead wires. Temp. of solder : 245±5°C Lead Free Solder (Sn-3Ag-0.5Cu) 235±5°C H63 Eutectic Solder

*[2] "C" expresses nominal capacitance value(pF)

No.	Item		Specification	Test method
12	Soldering effect (Non-preheat)	Appearance	No marked defect.	Solder temperature: 350±10°C or 260±5°C Immersion time : 3.5±0.5 s (In case of 260±5°C : 10±1 s) The depth of immersion is up to about 1.5 to 2.0mm from the root of lead wires. 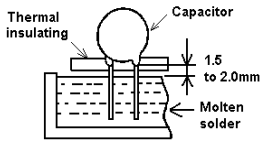 Pre-treatment : Capacitor should be stored at 85±2°C for 1 h, then placed at *1room condition for 24±2 h before initial measurements. Post-treatment : Capacitor should be stored for 1 to 2 h at *1room condition.
		Capacitance change	Within ±10%	
		I.R.	1000MΩ min.	
		Dielectric strength	Per item 3	
13	Soldering effect (On-preheat)	Appearance	No marked defect.	First the capacitor should be stored at 120+0/-5°C for 60+0/-5 s. Then, as in figure, the lead wires should be immersed solder of 260+0/-5°C up to 1.5 to 2.0mm from the root of terminal for 7.5+0/-1 s. 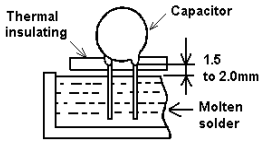 Pre-treatment : Capacitor should be stored at 85±2°C for 1 h, then placed at *1room condition for 24±2 h before initial measurements. Post-treatment : Capacitor should be stored for 1 to 2 h at *1room condition.
		Capacitance change	Within ±10%	
		I.R.	1000MΩ min.	
		Dielectric strength	Per item 3	
14	Flame test		The capacitor flame discontinue as follows. Cycle: 1 to 4 — Time: 30 s max. Cycle: 5 — Time: 60 s max.	The capacitor should be subjected to applied flame for 15 s. and then removed for 15 s until 5 cycle. 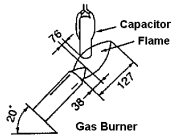
15	Passive flammability		The burning time should not be exceeded the time 30 s. The tissue paper should not ignite.	The capacitor under test should be held in the flame in the position which best promotes burning. Time of exposure to flame is for 30 s. Length of flame : 12±1mm Gas burner : Length 35mm min. Inside Dia. 0.5±0.1mm Outside Dia. 0.9mm max. Gas : Butane gas Purity 95% min. 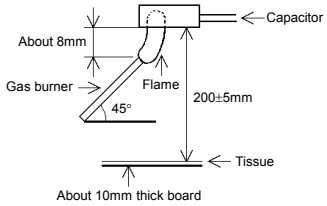

*1 "room condition" Temperature: 15 to 35°C, Relative humidity: 45 to 75%, Atmospheric pressure: 86 to 106kPa

No.	Item		Specification	Test method
16	Humidity (Under steady state)	Appearance	No marked defect.	Set the capacitor for 500±12 h at 40±2°C in 90 to 95% relative humidity. Post-treatment : Capacitor should be stored for 1 to 2 h at *1 room condition.
		Capacitance change	Char. SL : Within ±5% Char. B : Within ±10% Char. E, F : Within ±15%	
		Q	Char. SL : 275+5/2C*2min.(30pF under) 350min. (30pF min.)	
		D.F.	Char. B, E : 5.0% max. Char. F : 7.5% max.	
		I.R.	3000MΩ min.	
		Dielectric strength	Per item 3	
17	Humidity loading	Appearance	No marked defect.	Apply the rated voltage for 500±12 h at 40±2°C in 90 to 95% relative humidity. Post-treatment : Capacitor should be stored for 1 to 2 h at *1room condition.
		Capacitance change	Char. SL : Within ±5% Char. B : Within ±10% Char. E, F : Within ±15%	
		Q	Char. SL : 275+5/2C*2min.(30pF under) 350min. (30pF min.)	
		D.F.	Char. B, E : 5.0% max. Char. F : 7.5% max.	
		I.R.	3000MΩ min.	
		Dielectric strength	Per item 3	
18	Life	Appearance	No marked defect.	Impulse voltage Each individual capacitor should be subjected to a 5kV impulses for three times. Then the capacitors are applied to life test. 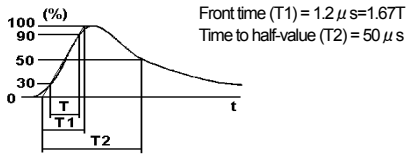 The capacitors are placed in a circulating air oven for a period of 1000 h. The air in the oven is maintained at a temperature of 125+2/-0 °C, and relative humidity of 50% max.. Throughout the test, the capacitors are subjected to a AC425V(r.m.s.)<50/60Hz> alternating voltage of mains frequency, except that once each hour the voltage is increased to AC1000V(r.m.s.) for 0.1 s. Post-treatment : Capacitor should be stored for 1 to 2 h at *1room condition.
		Capacitance change	Within ±20%	
		I.R.	3000MΩ min.	
		Dielectric strength	Per item 3	
19	Temperature and immersion cycle	Appearance	No marked defect.	The capacitor should be subjected to 5 temperature cycles, then consecutively to 2 immersion cycles. <Temperature cycle> Step / Temperature(°C) / Time 1 / -40+0/-3 / 30 min 2 / Room temp. / 3 min 3 / +125+3/-0 / 30 min 4 / Room temp. / 3 min Cycle time : 5 cycle <Immersion cycle> Step / Temperature(°C) / Time / Immersion water 1 / +65+5/-0 / 15 min / Clean water 2 / 0±3 / 15 min / Salt water Cycle time : 2 cycle Pre-treatment : Capacitor should be stored at 85±2°C for 1 h, then placed at *1room condition for 24±2 h. Post-treatment : Capacitor should be stored for 24±2 h at *1room condition.
		Capacitance change	Char. SL : Within ±5% Char. B : Within ±10% Char. E, F: Within ±20%	
		Q	Char. SL : 275+5/2C*2min.(30pF under) 350min. (30pF min.)	
		D.F.	Char. B, E : 5.0% max. Char. F : 7.5% max.	
		I.R.	3000MΩ min.	
		Dielectric strength	Per item 3	

*1 "room condition" Temperature: 15 to 35°C, Relative humidity: 45 to 75%, Atmospheric pressure: 86 to 106kPa
*2 "C" expresses nominal capacitance value(pF)

6.Packing specification

•Bulk type (Packing style code : B)

The number of packing = Packing quantity[*1] × n[*2]

The size of packing case and packing way

∗1 : Please refer to [Part number list].
∗2 : Standard n = 20 (bag)

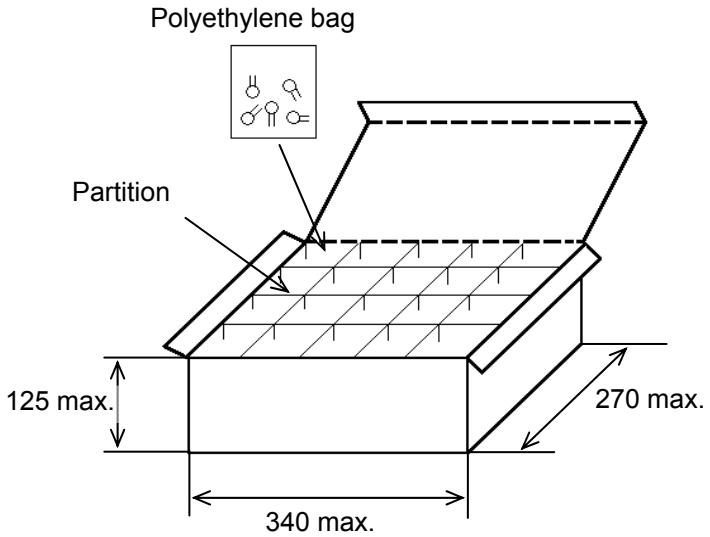

Unit : mm

Note)
The outer package and the number of outer packing be changed by the order getting amount.

•Ammo pack taping type (Packing style code : A)

· The tape with capacitors is packed zigzag into a case.
· When body of the capacitor is piled on other body under it.
· There should be 3 pitches and over without capacitors in leader and trailer.

The size of packing case and packing way

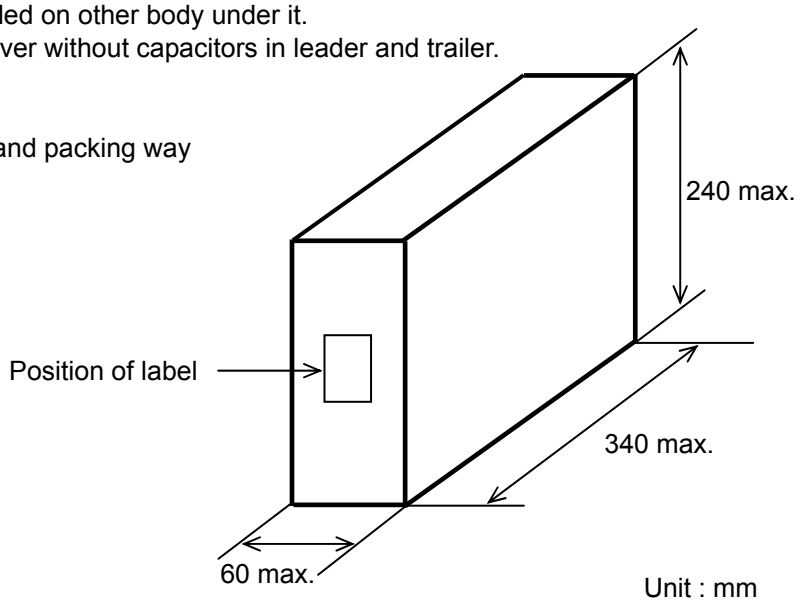

Unit : mm

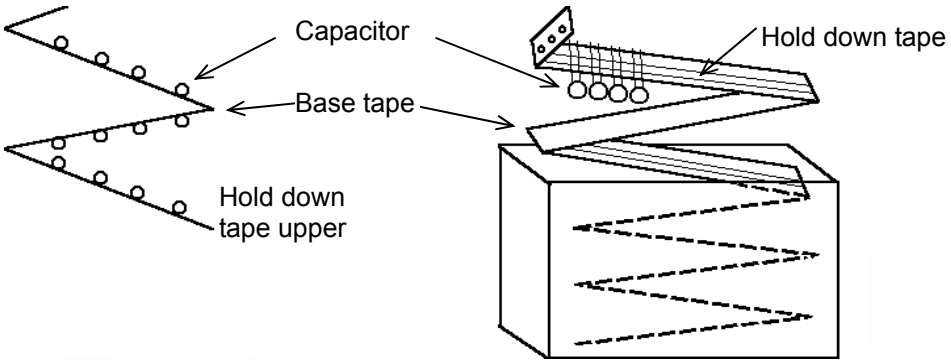

7. Taping specification

7-1. Dimension of capacitors on tape

Vertical crimp taping type < Lead code : N2 >

Pitch of component 12.7mm / Lead spacing 5.0mm

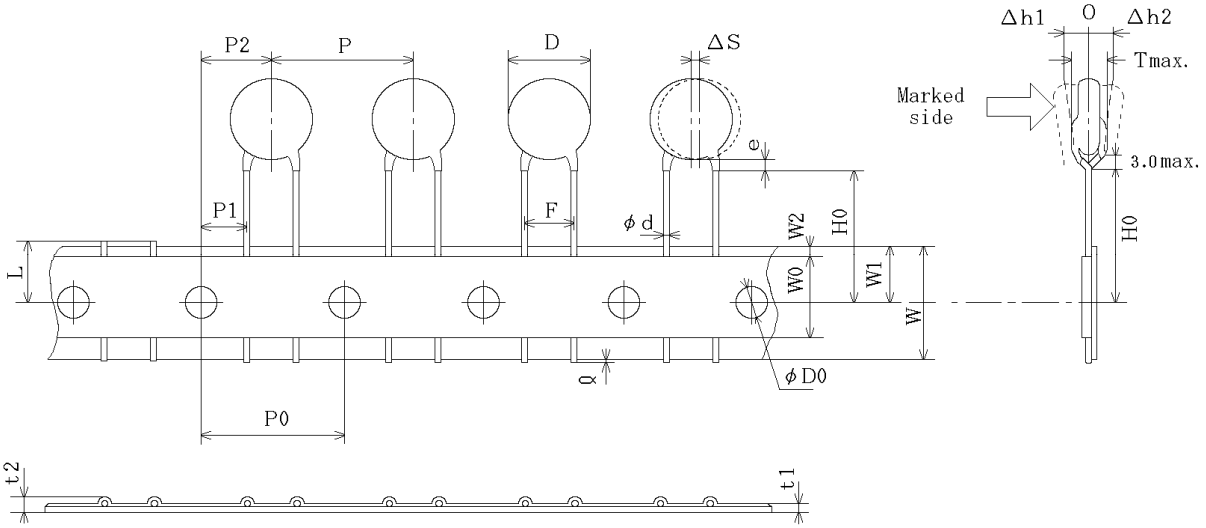

Unit : mm

Item	Code	Dimensions	Remarks
Pitch of component	P	12.7±1.0	
Pitch of sprocket hole	P0	12.7±0.3	
Lead spacing	F	$5.0^{0.8}_{-0.2}$	
Length from hole center to component center	P2	6.35±1.3	Deviation of progress direction
Length from hole center to lead	P1	3.85±0.7	
Body diameter	D	Please refer to [Part number list].	
Deviation along tape, left or right	ΔS	0±1.0	They include deviation by lead bend .
Carrier tape width	W	18.0±0.5	
Position of sprocket hole	W1	9.0±0.5	Deviation of tape width direction
Lead distance between reference and bottom planes	H0	$18.0^{2.0}_{-0}$	
Protrusion length	α	+0.5~−1.0	
Diameter of sprocket hole	φD0	4.0±0.1	
Lead diameter	φd	0.60±0.05	
Total tape thickness	t1	0.6±0.3	They include hold down tape thickness.
Total thickness, tape and lead wire	t2	1.5 max.	
Deviation across tape, front	Δh1	1.0 max.	
Deviation across tape, rear	Δh2		
Portion to cut in case of defect	L	$11.0^{0}_{-1.0}$	
Hold down tape width	W0	11.5 min.	
Hold down tape position	W2	1.5±1.5	
Coating extension on lead	e	Up to the end of crimp	
Body thickness	T	Please refer to [Part number list].	

Vertical crimp taping type < Lead code : N3 >
Pitch of component 15.0mm / Lead spacing 7.5mm

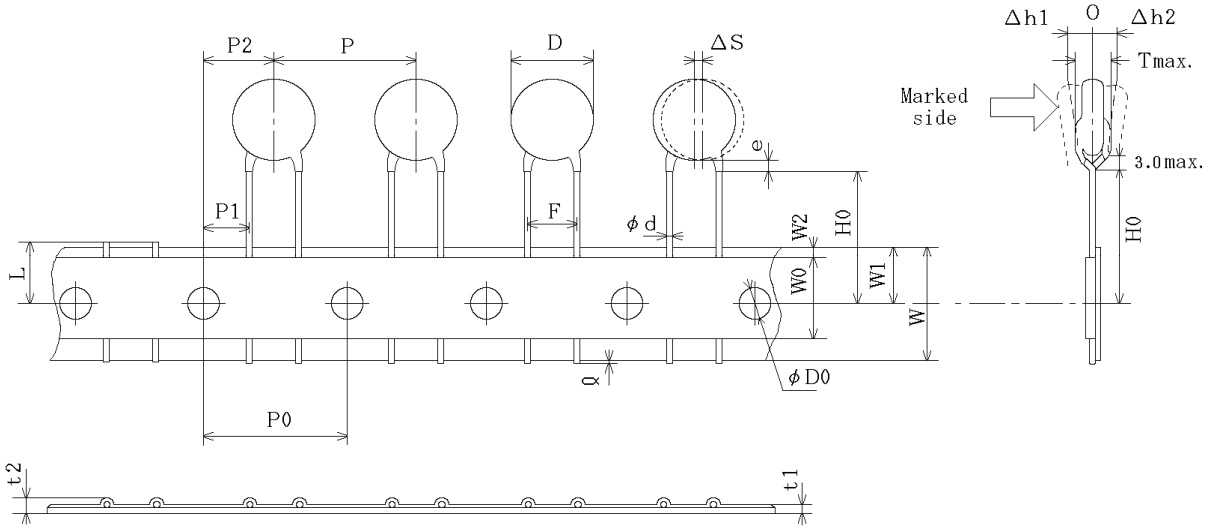

Unit : mm

Item	Code	Dimensions	Remarks
Pitch of component	P	15.0±2.0	
Pitch of sprocket hole	P0	15.0±0.3	
Lead spacing	F	7.5±1.0	
Length from hole center to component center	P2	7.5±1.5	Deviation of progress direction
Length from hole center to lead	P1	3.75±1.0	
Body diameter	D	Please refer to [Part number list].	
Deviation along tape, left or right	ΔS	0±2.0	They include deviation by lead bend .
Carrier tape width	W	18.0±0.5	
Position of sprocket hole	W1	9.0±0.5	Deviation of tape width direction
Lead distance between reference and bottom planes	H0	$18.0\pm^{2.0}_{0}$	
Protrusion length	α	+0.5~−1.0	
Diameter of sprocket hole	φD0	4.0±0.1	
Lead diameter	φd	0.60±0.05	
Total tape thickness	t1	0.6±0.3	They include hold down tape thickness.
Total thickness, tape and lead wire	t2	1.5 max.	
Deviation across tape, front	Δh1	2.0 max.	
Deviation across tape, rear	Δh2		
Portion to cut in case of defect	L	$11.0\pm^{0}_{1.0}$	
Hold down tape width	W0	11.5 min.	
Hold down tape position	W2	1.5±1.5	
Coating extension on lead	e	Up to the end of crimp	
Body thickness	T	Please refer to [Part number list].	

7-2. Splicing way of tape

1) Adhesive force of tape is over 3N at test condition as below.

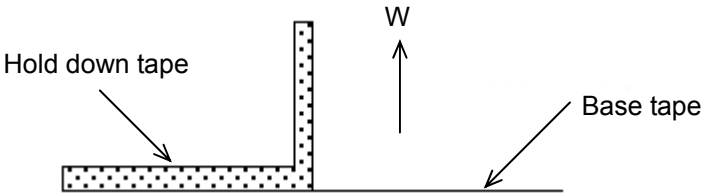

2) Splicing of tape

a) When base tape is spliced

•Base tape should be spliced by cellophane tape.
(Total tape thickness should be less than 1.05mm.)

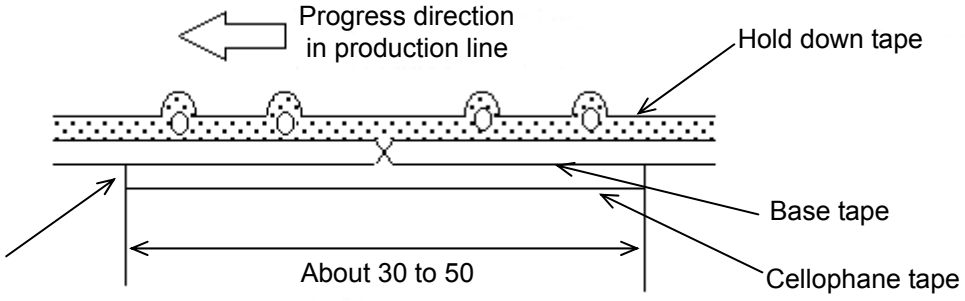

No lifting for the direction of progressing

Unit : mm

b) When hold down tape is spliced

•Hold down tape should be spliced with overlapping.
(Total tape thickness should be less than 1.05mm.)

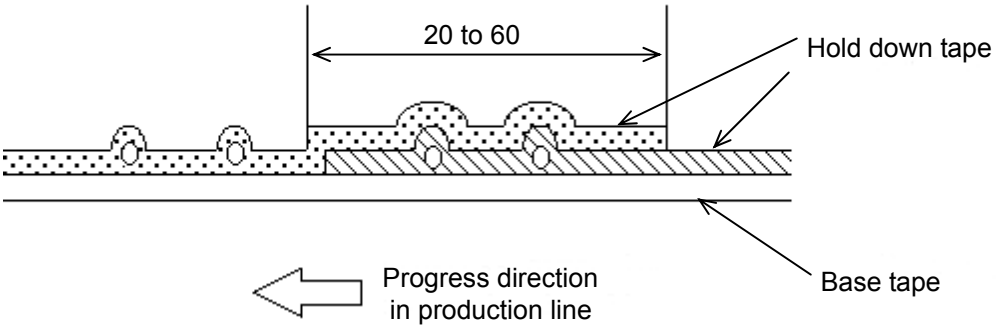

Unit : mm

c) When both tape are spliced

•Base tape and hold down tape should be spliced with splicing tape.

3) Missing components

•There should be no consecutive missing of more than three components.
•The number of missing components should be not more than 0.5% of total components that should be present in a Ammo pack.

Appendix
添付資料

EU RoHS and Halogen Free
RoHS指令とハロゲンフリーへの対応

This products of the following crresponds to EU RoHS and Halogen Free
当製品は以下の欧州RoHSとハロゲンフリーに対応しています。

(1) RoHS

EU RoHs 2011/65/EC compliance
2011/65/EC（改正RoHS指令）に対応

maximum concentration values tolerated by weight in homogeneous materials
・1000 ppm maximum Lead
・1000 ppm maximum Mercury
・100 ppm maximum Cadmium
・1000 ppm maximum Hexavalent chromium
・1000 ppm maximum Polybrominated biphenyls (PBB)
・1000 ppm maximum Polybrominated diphenyl ethers (PBDE)

鉛：1000ppm以下
水銀：1000ppm以下
カドミウム：100ppm以下
六価クロム：1000ppm以下
ポリ臭化ビフェニル(PBB)：1000ppm以下
ポリ臭化ジフェニルエーテル(PBDE)：1000ppm以下

(2) Halogen-Free
ハロゲンフリー

The International Electrochemical Commission's (IEC) Definition
of Halogen-Free (IEC 61249-2-21) compliance
IEC 61249-2-21の閾値に基づく重量含有率に対応

・900 ppm maximum chlorine
・900 ppm maximum bromine
・1500 ppm maximum total chlorine and bromine

臭素（Br）：900ppm以下
塩素（Cl）：900ppm以下
臭素（Br）及び 塩素（Cl）総量：1500ppm以下