FIBER OPTIC TRANSMITTING MODULE

TOTX173

FIBER OPTIC TRANSMITTING MODULE FOR DIGITAL AUDIO EQUIPMENT

- Conform to JEITA Standard CP−1201 (For Digital Audio Interfaces including Fiber Optic inter−connections).
- TTL Interface
- LED is driven by differential circuit.

Unit: mm

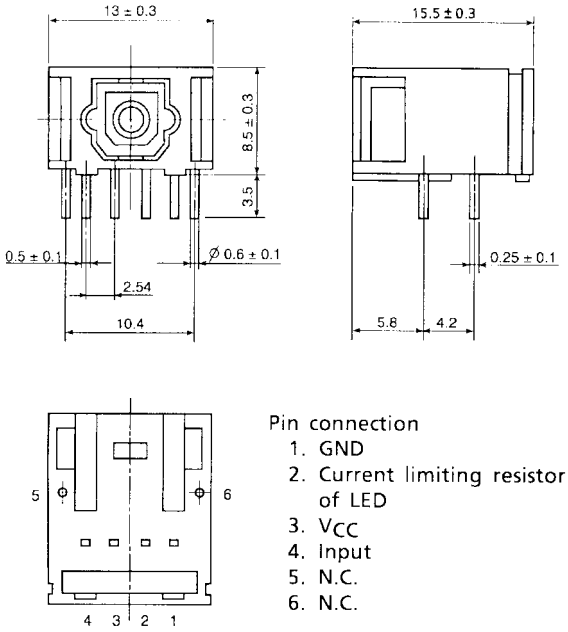

1. Maximum Ratings (Ta = 25°C)

Characteristics	Symbol	Rating	Unit
Storage Temperature	T_{stg}	−40 to 70	°C
Operating Temperature	T_{opr}	−20 to 70	°C
Supply Voltage	V_{CC}	−0.5 to 7	V
Input Voltage	V_{IN}	−0.5 to V_{CC} + 0.5	V
Soldering Temperature	T_{sol}	260 (Note 1)	°C

Note 1: Soldering time ≤ 10 s (More than 1 mm apart from the package).

2. Recommended Operating Conditions

Characteristics	Symbol	Min	Typ.	Max	Unit
Supply Voltage	V_{CC}	4.75	5.0	5.25	V
High Level Input Voltage	V_{IH}	2.0	—	V_{CC}	V
Low Level Input Voltage	V_{IL}	0	—	0.8	V

Handling precaution: The LEDs used in this product contain GaAs (Gallium Arsenide).
Care must be taken to protect the safety of people and the environment when scrapping or terminal processing.

3. Electrical and Optical Characteristics (Ta = 25°C, V_{CC} = 5 V)

Characteristics	Symbol	Test Condition	Min	Typ.	Max	Unit
Data Rate		NRZ Code (Note 2)	DC	—	6	Mb / s
Transmission Distance		Using APF (Note 3) and TORX173	0.2	—	10	m
Pulse Width Distortion (Note 4)	Δtw	Pulse Width 165 ns Pulse cycle 330 ns, C_L = 10 pF Using TORX173	−20	—	20	ns
Fiber Output Power	P_f	APF 1 m, R = 8.2 kΩ (Note 5)	−21	—	−15	dBm
Peak Emission Wavelength	λ_p		—	660	—	nm
Current Consumption	I_{CC}	R = 8.2 kΩ	—	15	25	mA
High Level Input Voltage	V_{IH}		2.0	—	—	V
Low Level Input Voltage	V_{IL}		—	—	0.8	V
High Level Input Current	I_{IH}		—	—	20	μA
Low Level Input Current	I_{IL}		—	—	−0.4	mA

Note 2: LED is on when input signal is high level, it is off when low level.
For data rate > 3 Mb / s, the duty factor must be kept 25 to 75%.
Note 3: All Plastic Fiber (970 / 1000 μm).
Note 4: Between input of TOTX173 and output of a fiber optic receiving module.
Note 5: Measure with a standard optical fiber with fiber optic connectors.

4. Example of Typical Characteristics (Note 6)

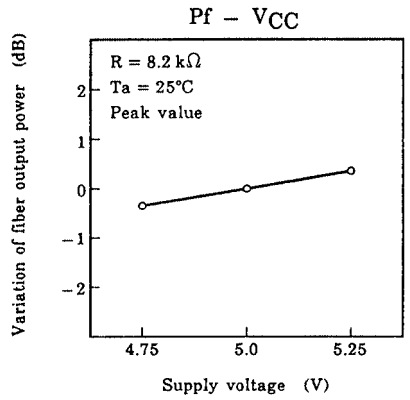

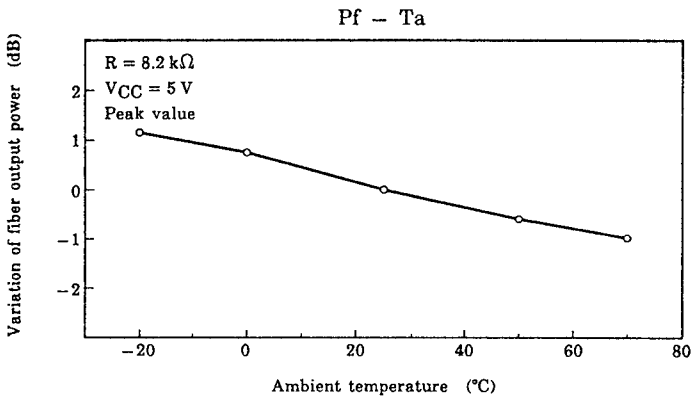

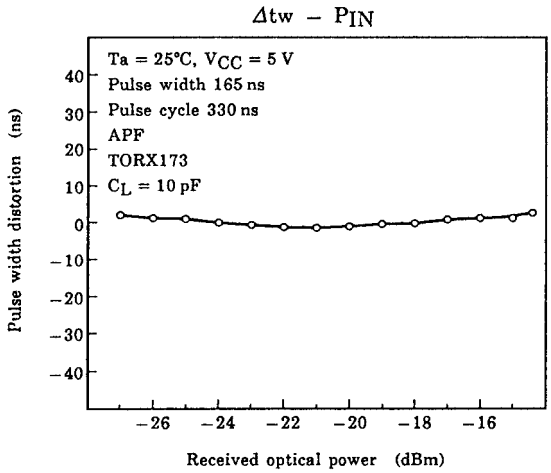

Note 6: There give characteristic examples, and its values are not guaranteed.

5. Application Circuit

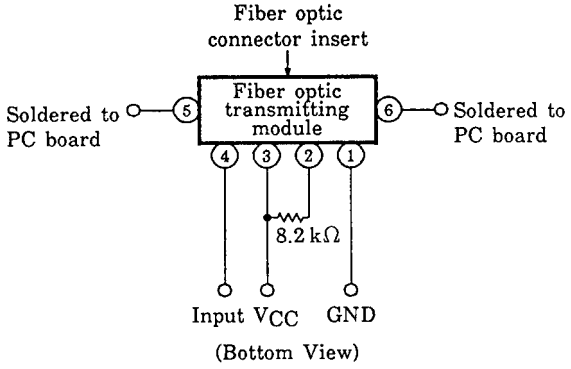

6. Applicable optical fiber with fiber optic connectors

TOCP172−□□B

7. Precautions during use

(1) Maximum rating
The maximum ratings are the limit values which must not be exceeded when using the device. Any one of the rating must not be exceeded. If The maximum rating is exceeded, the characteristics may not be recovered. In some extreme cases, the device may be permanently damage.

(2) Life of light emitters
When the optical module is used for over a long period, degeneration of characteristics is mostly due to lowering of the fiber output power (Pf). This is caused by the degradation of the optical output of the LED's used as the light source. The cause of degradation of the optical output of the LED' may be defects in wafer crystallization or mold resin stress. The detailed causes are, however, not clear.
The life of light emitters is greatly influenced by operating conditions and usage environment as well as the life characteristics unique to the device. Thus, when selecting a light emitter and setting the operating conditions, Toshiba recommends that you check the life characteristics.
Depending on the environment conditions, Toshiba recommends maintenance such as regular checks on the amount of optical output.

(3) Soldering
Optical modules use semiconductor devices internally. However, in principle, optical modules are optical components. At soldering, take care that flux dose not contact the emitting surface or detecting surface. Also take care at flux removal after soldering.
Some optical modules come with protective cap. The protective cap is used to avoid malfunction when the optical module is not in use. Not that it is not dust or waterproof.
As mentioned before, optical modules are optical component. Thus, in principle, soldering where there may be flux residue or flux removal after soldering is not recommended. Toshiba recommends that soldering be performed without the optical module mounted on the board. Then, after the board is cleaned, solder the optical module manually. Do not perform any further cleaning.
If the optical module cannot be soldered manually, use non−halogen (chlorine−free) flux and make sure, without cleaning, there is no residue such as chlorine. This is one of the ways to eliminate the effects of flux.

(4) Vibration and shock
This module is resin−molded construction with wire fixed by resin. This structure is relatively sound against vibration or shock, In actual equipment, there are some cases where vibration, shock, and stress is applied to soldered parts or connected parts, resultingin line cut. Attention must be paid to the design of the mechanism for applications which are subject to large amounts of vibration.

(5) Fixing fiber optical transceiving module
Solder the fixed pin (pins 5 and 6) of fiber optic transmitting module TOTX173 to the printed circuit board to fix the module to the board.

(6) Solvent
When using solvent for flux removal, do not use a high acid or high alkali solvent. Be careful not to pour solvent in the optical connector ports. If solvent is inadvertently poured there, clean with cotton tips.

(7) Protective cap
When the fiber optic transmitting module TOTX173 is not in use, use the protective cap.

(8) Supply Voltage
Use the supply voltage within the Typ. operating condition (V_{CC} = 5 ± 0.25 V). Make sure that supply voltage does not exceed the maximum rating value of 7 V, even instantaneously.

(9) Input voltage
If a voltage exceeding the maximum rating value (V_{CC} + 0.5V) is applied to the transmitter input, the internal IC may degrade causing some damage. If excessive voltage due to surges may be added to the input, insert a protective circuit.

(10) Soldering condition
Solder at 260°C or less within ten seconds.

(11) Precaution on waste
When discarding devices and packing materials, follow procedures stipulated by local regulations in order to protect the environment against contamination.
Compound semiconductors such as GaAs are used as LED materials for this module. When discarding waste or at final processing, attention must be paid to workers and the environment.

(12) Precaution on use
Toshiba is continually working to improve the quality and the reliability of its products. Nevertheless, semiconductor devices in general can malfunction or fail due to their inherent electrical sensitivity and vulnerability to physical stress. It is the responsibility of the buyer, when utilizing Toshiba products, to observe standards of safety, and to avoid situations in which a malfunction or failure of a Toshiba product could cause loss of human life, bodily injury or damage to property.
In developing your designs, please ensure that Toshiba products are used within specified operating ranges as set forth in the most recent product specifications. Also, please keep in mind the precautions and conditions set forth in the Toshiba Semiconductor Reliability Handbook.

RESTRICTIONS ON PRODUCT USE

000707EAC

- TOSHIBA is continually working to improve the quality and reliability of its products. Nevertheless, semiconductor devices in general can malfunction or fail due to their inherent electrical sensitivity and vulnerability to physical stress. It is the responsibility of the buyer, when utilizing TOSHIBA products, to comply with the standards of safety in making a safe design for the entire system, and to avoid situations in which a malfunction or failure of such TOSHIBA products could cause loss of human life, bodily injury or damage to property.
  In developing your designs, please ensure that TOSHIBA products are used within specified operating ranges as set forth in the most recent TOSHIBA products specifications. Also, please keep in mind the precautions and conditions set forth in the “Handling Guide for Semiconductor Devices,” or “TOSHIBA Semiconductor Reliability Handbook” etc..
- The TOSHIBA products listed in this document are intended for usage in general electronics applications (computer, personal equipment, office equipment, measuring equipment, industrial robotics, domestic appliances, etc.). These TOSHIBA products are neither intended nor warranted for usage in equipment that requires extraordinarily high quality and/or reliability or a malfunction or failure of which may cause loss of human life or bodily injury (“Unintended Usage”). Unintended Usage include atomic energy control instruments, airplane or spaceship instruments, transportation instruments, traffic signal instruments, combustion control instruments, medical instruments, all types of safety devices, etc.. Unintended Usage of TOSHIBA products listed in this document shall be made at the customer’s own risk.
- Gallium arsenide (GaAs) is a substance used in the products described in this document. GaAs dust and fumes are toxic. Do not break, cut or pulverize the product, or use chemicals to dissolve them. When disposing of the products, follow the appropriate regulations. Do not dispose of the products with other industrial waste or with domestic garbage.
- The information contained herein is presented only as a guide for the applications of our products. No responsibility is assumed by TOSHIBA CORPORATION for any infringements of intellectual property or other rights of the third parties which may result from its use. No license is granted by implication or otherwise under any intellectual property or other rights of TOSHIBA CORPORATION or others.
- The information contained herein is subject to change without notice.