Breitband-Lautsprecher Westra KC-130-1344

Best.Nr. 640 620

NOMINAL POWER HANDLING ACC. DIN IEC 268:	PN:	25 W
NOMINAL IMPEDANCE:	ZN:	4 Ω
VOICE COIL RESISTANCE:	RE:	3,3 Ω ± 10%
FREE AIR RESONANT FREQUENCY	fr:	120 Hz ± 10%
FREQUENCY RANGE ACC. DIN IEC 268:		70 - 20000 Hz
VOICE COIL CARRIER MATERIAL:		SPECIAL
VOICE COIL DIAMETER:		19 mm
SENSITIVITY ACC. DIN IEC 268 (1W, 1m):		85 dB ±1 dB
TOTAL WEIGHT OF UNIT:		830 g

CHARACTERISTICS:
COAXIAL TWEETER SYSTEM, INTEGRATED CROSSOVER NETWORK

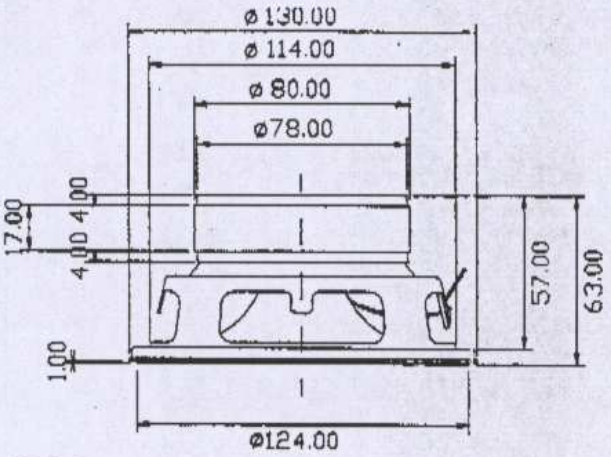

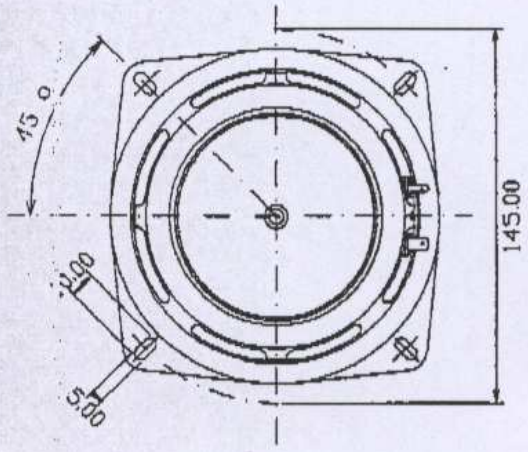

DIMENSIONS IN MM

MECHANICAL TOLERANCES ACC. TO DIN 6930 (Allgemeintoleranzen, Genauigkeitsgrad G)

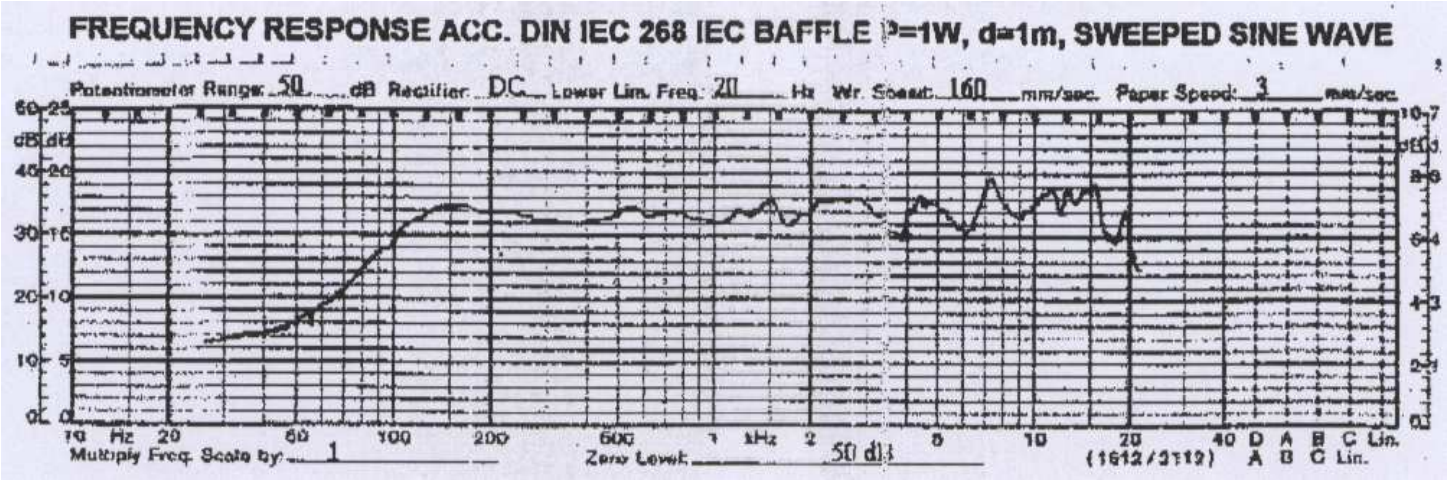

Q-FACTORS:	QMS:	7,12	
	QES:	1,06	
	QTS:	0,92	
TOTAL MOVING MASS:	MMS:	5,31	g
EFFECTIVE DIAPHRAGM AREA:	SD:	0,0078	m^2
COMPLIANCE:	CMS:	0,35	mm/N
FORCE FACTOR:	BL:	3,5	Tm
EQUIVALENT AIR VOLUME OF SUSPENSION:	VAS:	3	l
MAGNET DATA:	POLE PIECE DIAMETER:	18	mm
	AIRGAP HEIGHT:	3	mm
	VOICE COIL HEIGHT:	5	mm
	AIRGAP FLUX DENSITY:	1130	mT
MAGNET DIMENSIONS:		82 / 32 / 17	mm
WEIGHT OF MAGNET:		380	g

CROSSOVER NETWORK FOR POWER HANDLING TEST

THE NOMINAL POWER HANDLING HAS BEEN CHECKED UNDER THE FOLLOWING CONDITIONS:
CLOSED BOX OF 5 L

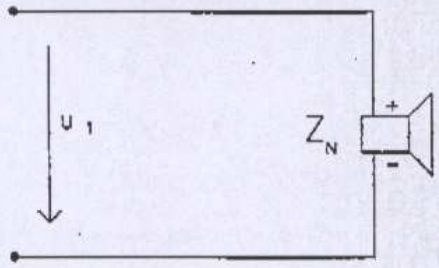

TESTSIGNAL:
SIMULATED PROGRAM SIGNAL ACC. DIN IEC 268
300 HRS: 1 min WORK, 2 min PAUSE

Z(N)	U1[V(eff)]	L1 [mH]	C1 [µF]	L2 [mH]	C2 [µF]
4	10				

CUMULATIVE SPECTRAL DECAY MEASURED WITH MLSSA® IN WESTRA ANECHOIC CHAMBER, 1 W, 1 m